MECH 9 BRIDGE PROJECT

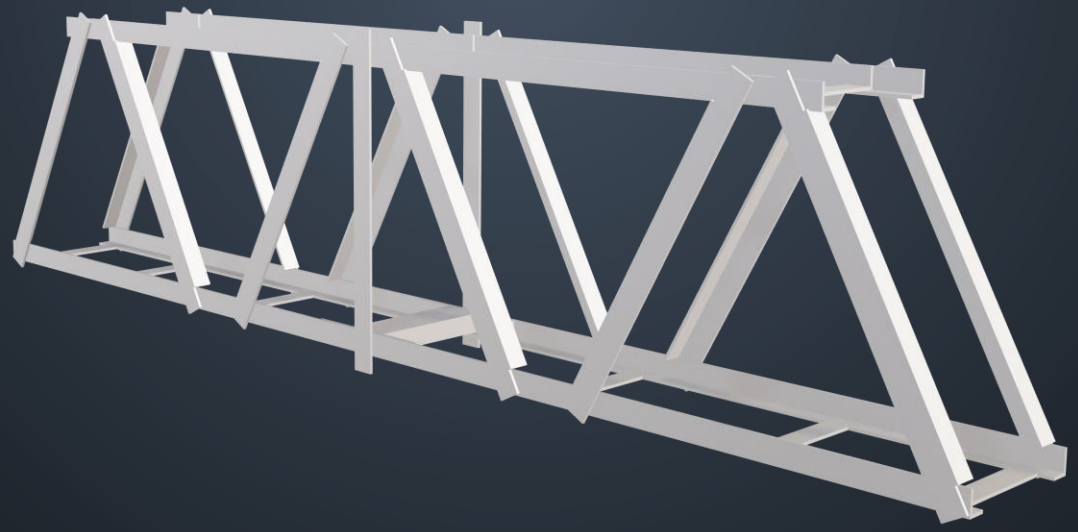

FROM PRATT TO WARREN

Design criteria:

- High Strength
- Low Total Weight
- Aesthetic Design
- Minimal Deflection

Pratt truss bridge

Remove zero force members

Warren truss bridge

FROM SKETCH TO CAD

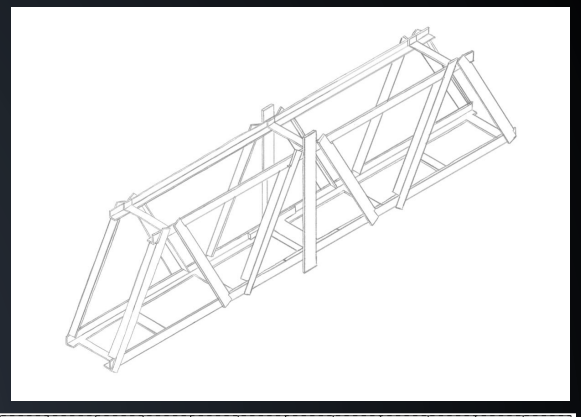

Hand sketch →

- **Quick Idea Generation**: Rapidly explored design concepts and Ideas
- **Idea Exploration: S**uch as adding a support member in the center
- **Better Visualization**: Understand proportions and structure.

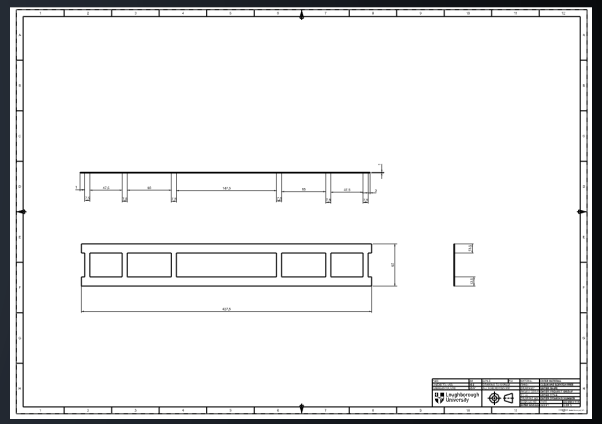

Engineering Drawings →

- **Precision & Accuracy:** Provide exact dimensions and specifications
- **Manufacturing & Construction Guide:** Served as a blueprint when manufacturing in the lab
- **Integration with CAD:** served as a foundation for CAD

3D CAD model →

- **Realistic Visualization:** Provided a detailed, representation of the bridge parts
- **Efficient Modifications:** Allowed us to make quick adjustments without redrawing everything
- **Material Estimation** – Helped us to calculate material usage to estimate weight

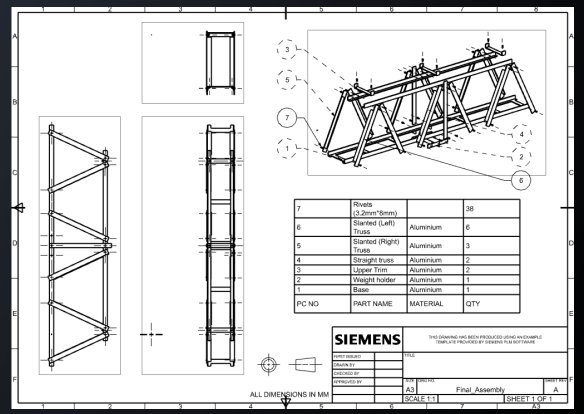

Assembly →

- **Visualization:** Visualize the whole bridge design
- **Highlite key points:** Clearly illustrate connection points and bending points for manufacturing

BUILDING OUR BRIDGE

Active decision to manufacture **single pieces** rather than using the waterjet for major bridge parts

Multi-axial strength achieved by folding in **more dimensions**

Truss sit against the top rails and base giving it support

Attachment testing piece was supported by the base lips

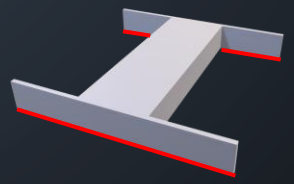

KEY PROCESSES

Major and minor processes used:

Major:

- Sheet metal bending
- Bandsaw
- Guillotine

Minor:

- Scribe
- Set square
- Hand drill
- Mallet
- Hole punch
- Pop-rivet tool.

Our steps for a high-quality manufacturing process

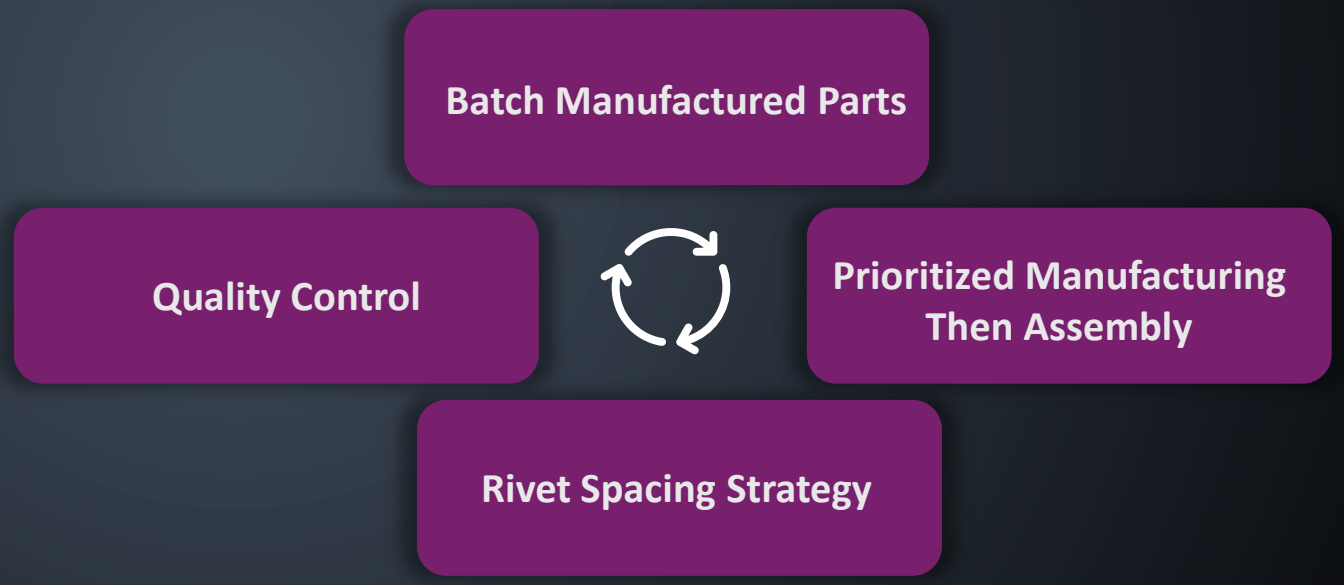

BRIDGE PERFORMANCE

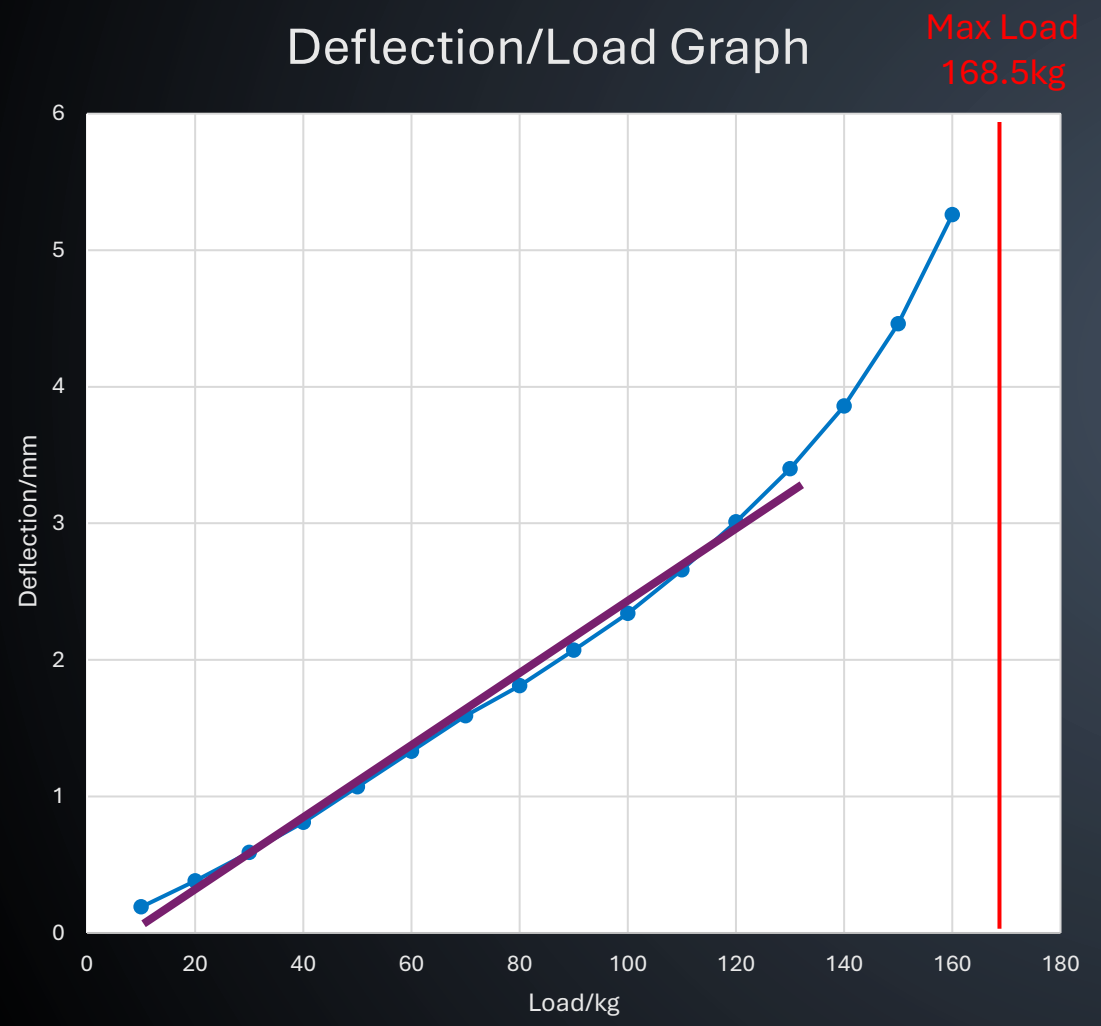

Key analysis:

Deflection At 30Kg: 0.59 mm

Maximum Load Capacity: 168.5kg

Elastic Behavior: The graph's linear region indicates elastic behavior between 0 and 120 kg

Load/kg	Deflection/mm
10	0.19
20	0.38
30	0.59
40	0.81
50	1.07
60	1.33
70	1.59
80	1.81
90	2.07
100	2.34
110	2.66
120	3.01
130	3.4
140	3.86
150	4.46
160	5.26
170	

PERFORMANCE ANALYSIS

Failure points:

1. **Torsion Issues:** Caused by bridge height and slight truss length variations
2. **Material Failure :** Due to an oversized rivet hole reducing structural integrity
3. **Lower Truss Bending:** Bent over bas due to lack of support in the horizontal direction

Success points:

1. **Strong Weight Attachment Structure:** Successfully resisted weight being applied on it
2. **Fold Reinforced Design:** Successfully supported bridge structure & buckling
3. **Failure Resistance:** The bridge did not fail due to a single piece indicating no single weak point

FUTURE IMPROVMENTS

Manufacturing Quality: An overall better manufacturing process would achieve more consistently sized pieces

Lower Bridge Height: Reducing the overall height minimizes torsional forces, improving stability and durability

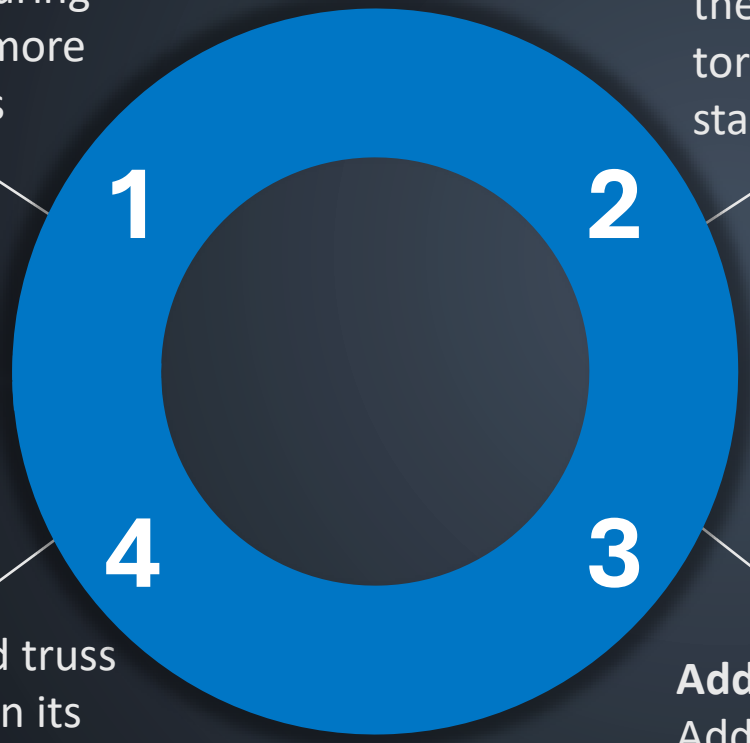

Base Modifications: To aid truss support perpendicularly on its lower end we could add an upper lip to the base (Figure 1)

Additional Transverse Supports: Adding extra reinforcement at the bridge ends further reduces torsional stresses (Figure 2)

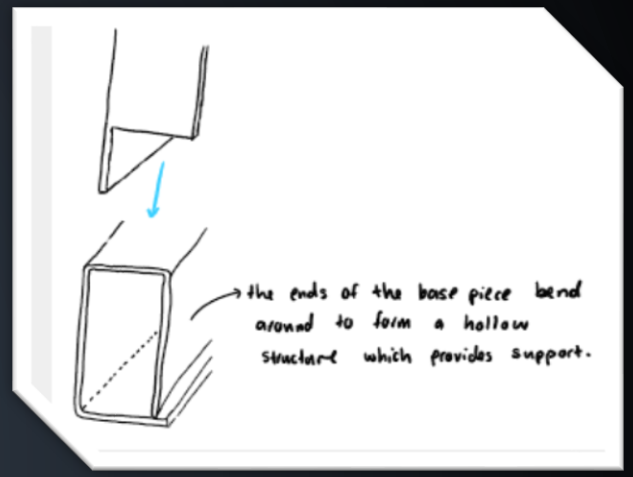

Figure 1

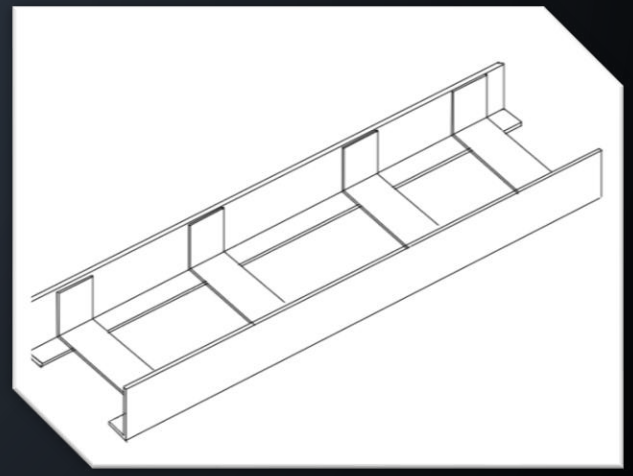

Figure 2

TEAM STRUCTURE & WORKFLOW

- Pietro
  - Stevie — Manufacturing & Engineering drawings
  - Paula — Design processes & Hand drawings
  - Faith — Result analysis & CAD
  - Sanjeevan — Results & Engineering drawings
  - David — Introduction & Assembly
  - Alaa — Introduction & Assembly

- Elected team leader
- Regular meetings to track progression
- Equal task division
- Clear and strict deadlines
- Frequent Communication via WhatsApp & email

GANTT CHART

Milestone marker: 9

Milestone description	Assigned to	Progress	Start	Days
Design Processe				
Bridge type selection	All	100%	03/02/2025	7
Bridge design development	All	100%	08/02/2025	9
Hand sketches	Paula	100%	05/02/2025	12
Engineering Drawings	Sanjevan & Steven	100%	14/02/2025	11
CAD model	Faith & David & Alaa	100%	22/02/2025	9
Manufacturing				
CAD Assembly	David & Alaa	100%	28/02/2025	11
Bridge building	All	100%	03/03/2025	3
Presentation				
Introduction	David & Alaa	100%	10/03/2025	3
Design Processe	Paula	100%	02/03/2025	12
Manufacturing	Steven	45%	09/03/2025	7
Results	Sanjevan	0%	17/03/2025	6
Results analysis	Faith	0%	19/03/2025	5
Layout	Pietro	65%	10/03/2025	16

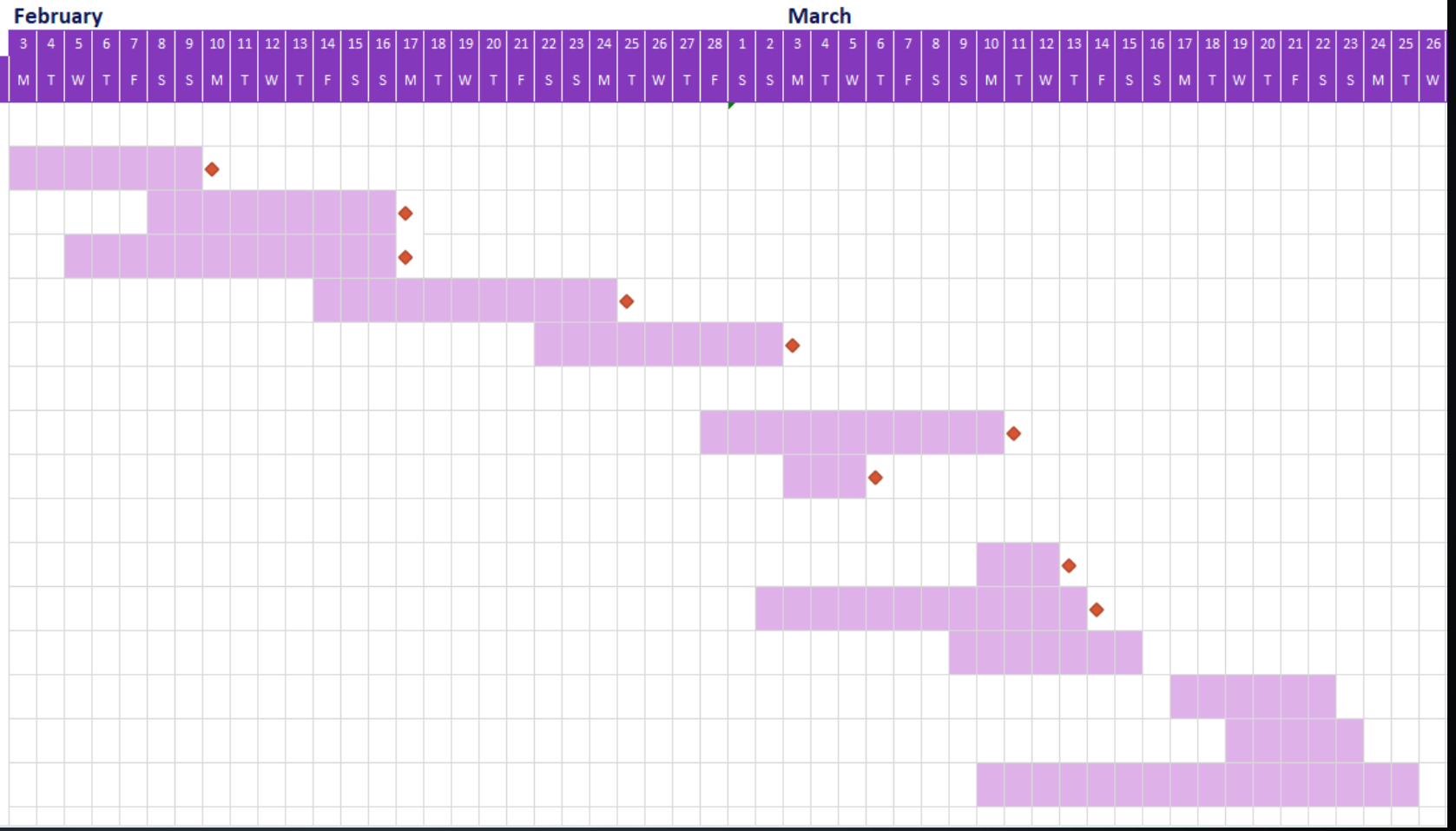

Appendix

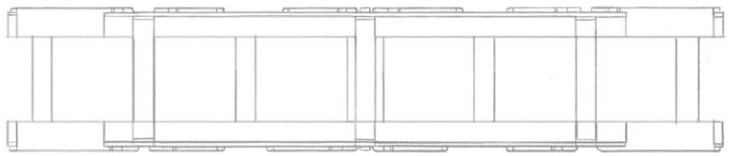

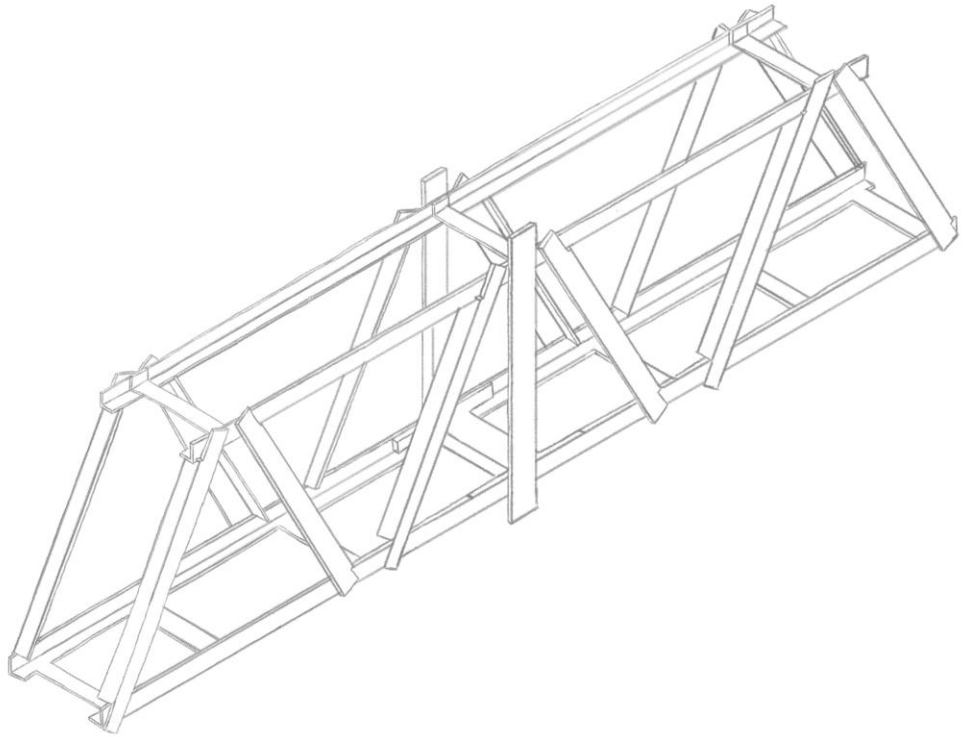

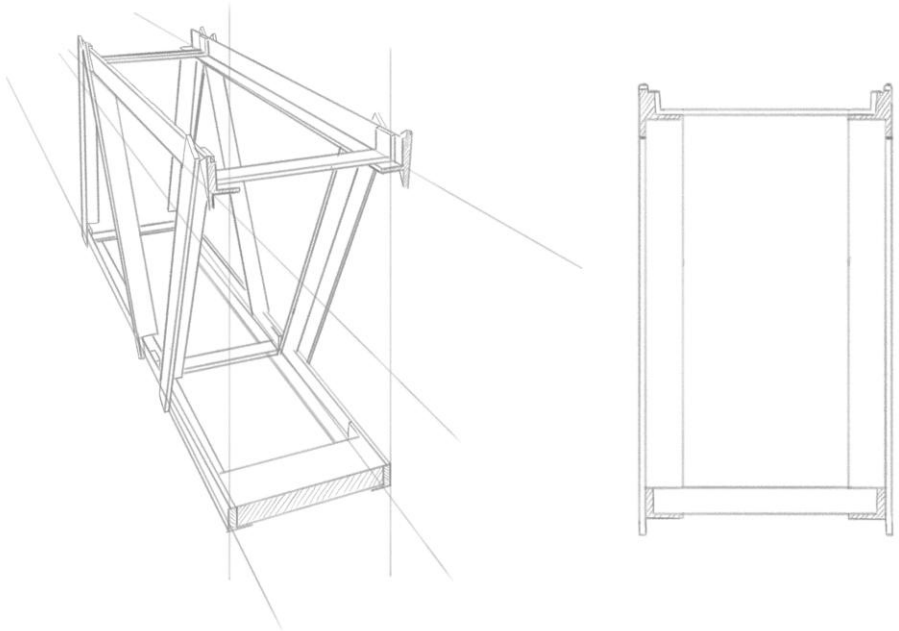

Appendix

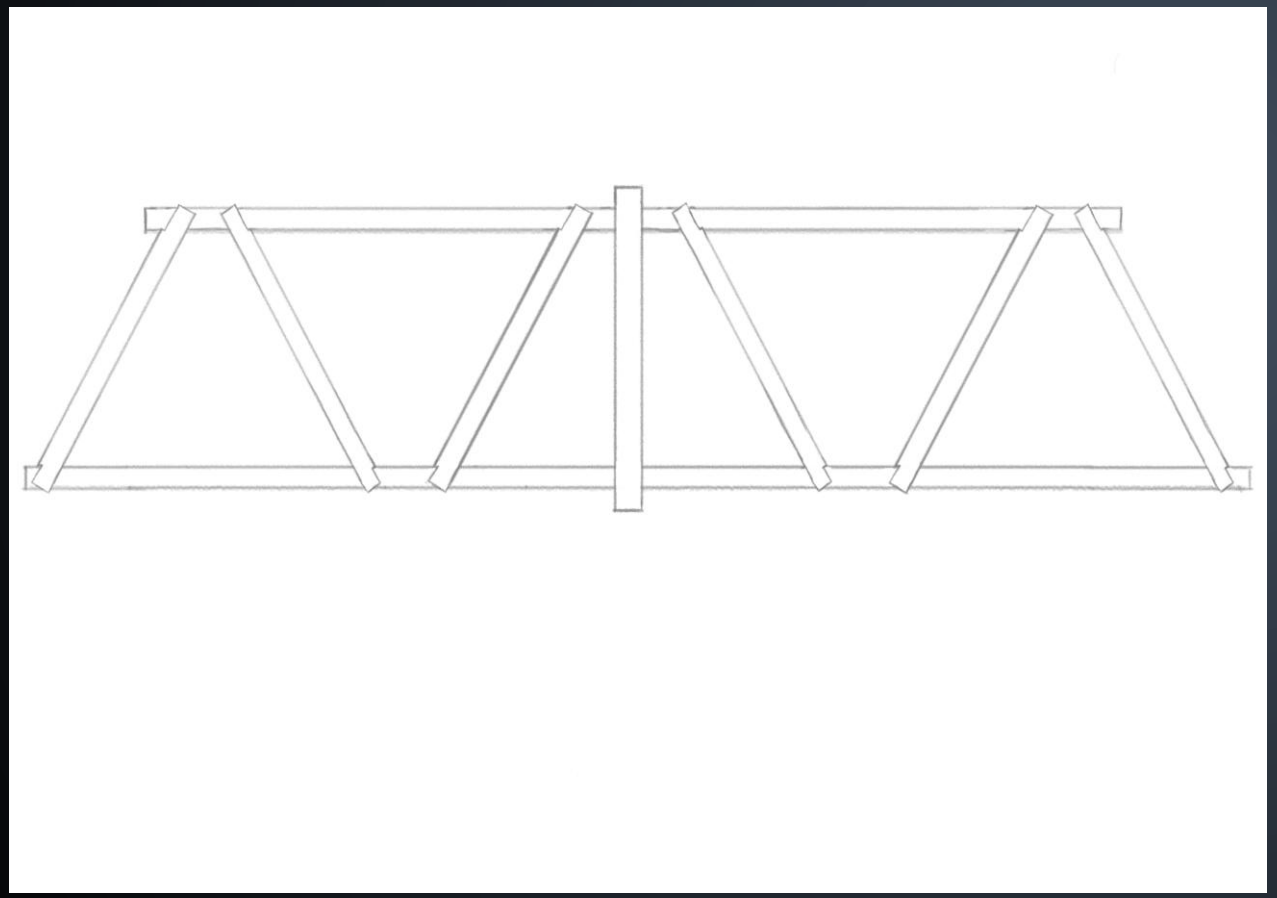

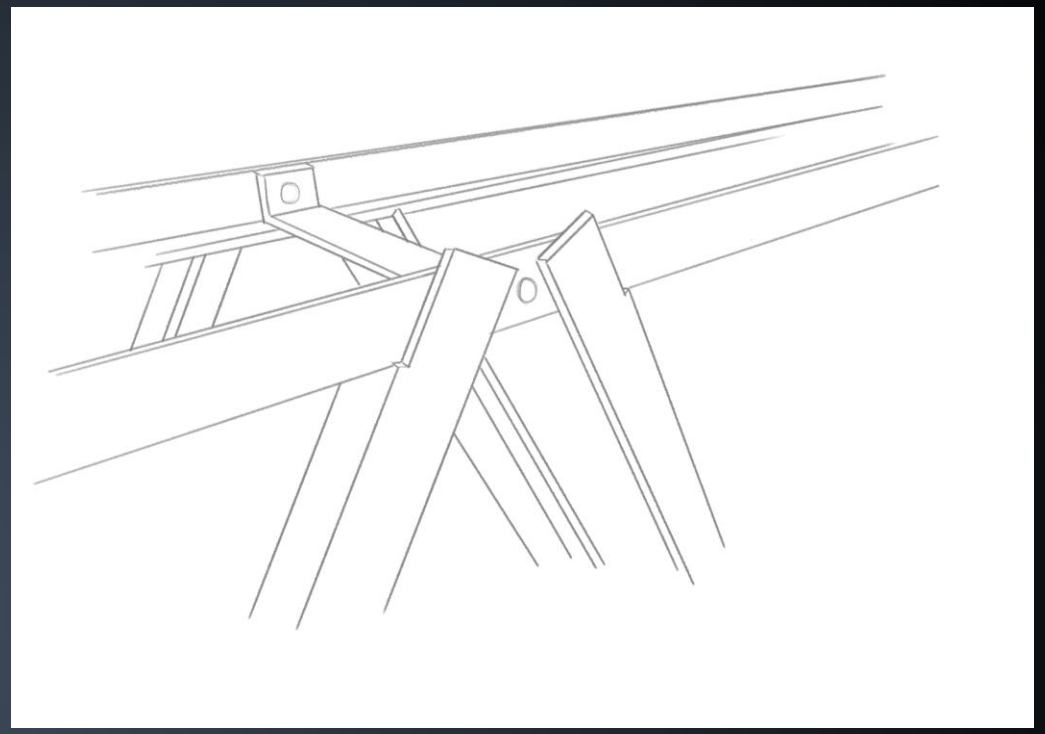

Appendix

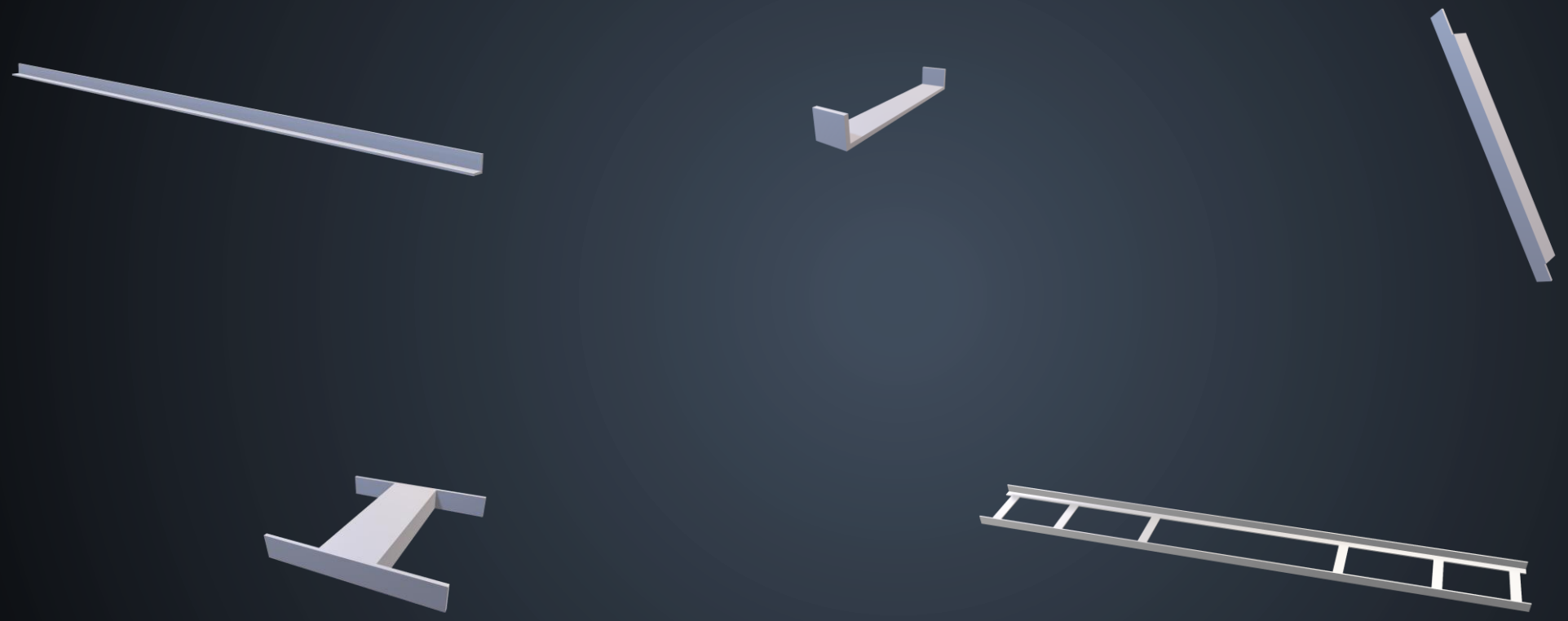

Appendix

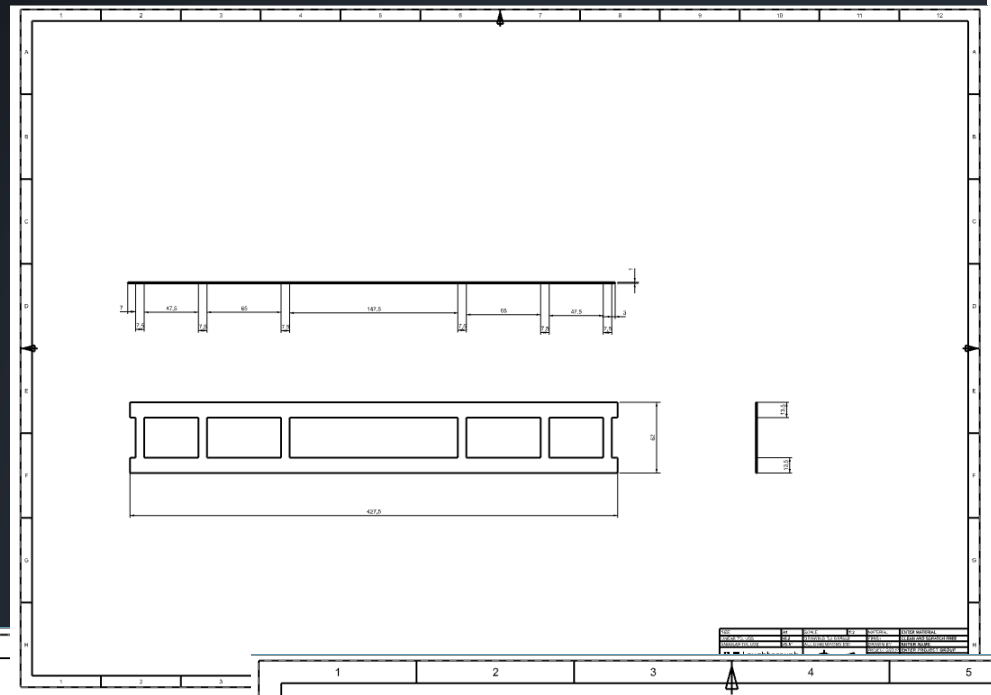
47,5
65
147,5
65
47,5
62
427,5

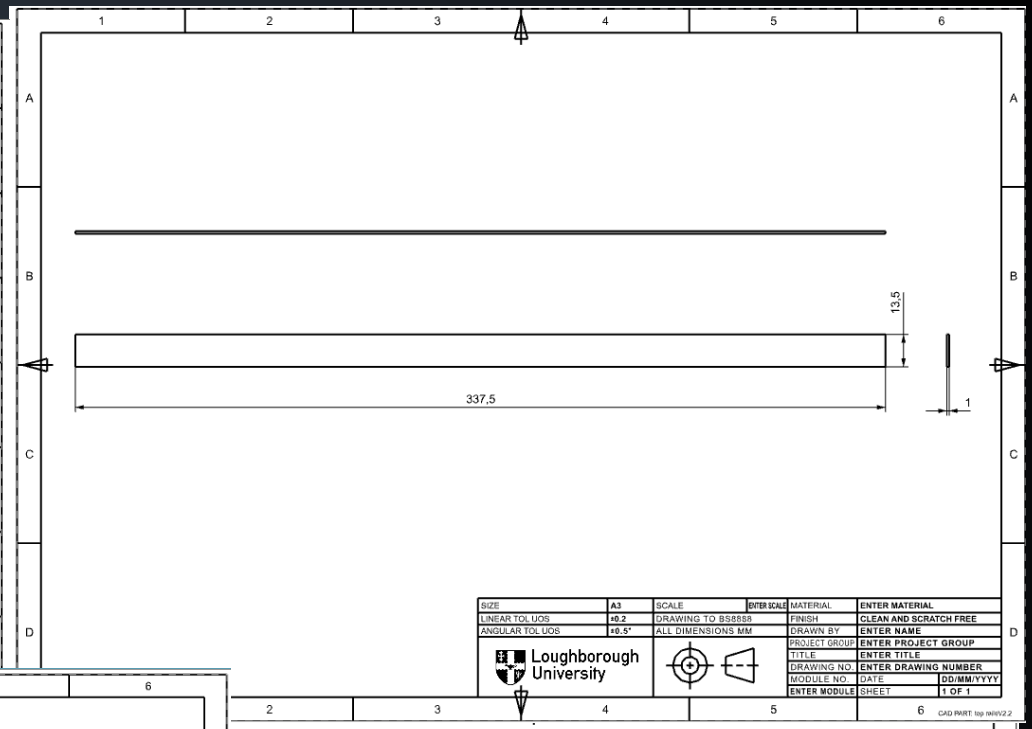
13,5
337,5
1
SIZE A3
SCALE ENTER SCALE
MATERIAL ENTER MATERIAL
LINEAR TOL UOS ±0.2
DRAWING TO BS8888
FINISH CLEAN AND SCRATCH FREE
ANGULAR TOL UOS ±0.5°
ALL DIMENSIONS MM
DRAWN BY ENTER NAME
PROJECT GROUP ENTER PROJECT GROUP
TITLE ENTER TITLE
DRAWING NO. ENTER DRAWING NUMBER
MODULE NO. DATE DD/MM/YYYY
ENTER MODULE SHEET 1 OF 1
Loughborough University
CAD PART: top rev2.2

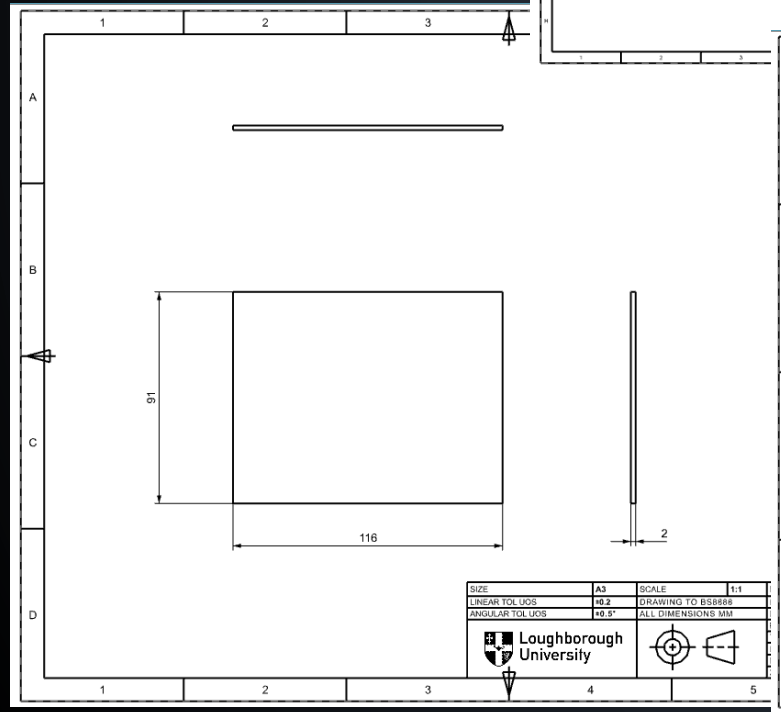
91
116
2
SIZE A3
SCALE 1:1
LINEAR TOL UOS ±0.2
DRAWING TO BS8888
ANGULAR TOL UOS ±0.5°
ALL DIMENSIONS MM
Loughborough University

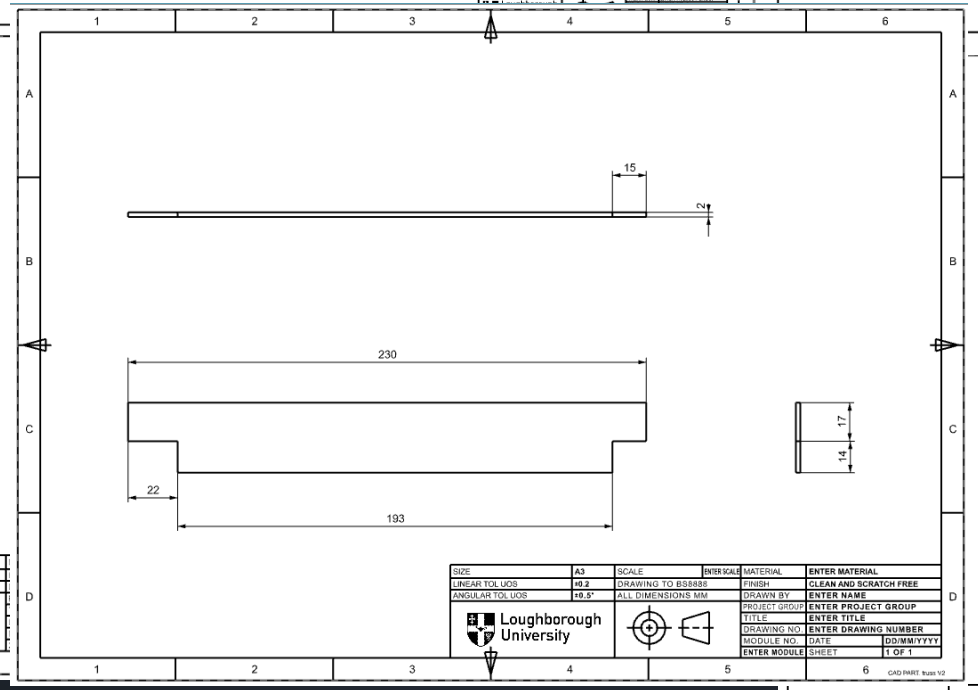
15
2
230
22
193
17
14
SIZE A3
SCALE ENTER SCALE
MATERIAL ENTER MATERIAL
LINEAR TOL UOS ±0.2
DRAWING TO BS8888
FINISH CLEAN AND SCRATCH FREE
ANGULAR TOL UOS ±0.5°
ALL DIMENSIONS MM
DRAWN BY ENTER NAME
PROJECT GROUP ENTER PROJECT GROUP
TITLE ENTER TITLE
DRAWING NO. ENTER DRAWING NUMBER
MODULE NO. DATE DD/MM/YYYY
ENTER MODULE SHEET 1 OF 1
Loughborough University
CAD PART: truss V2

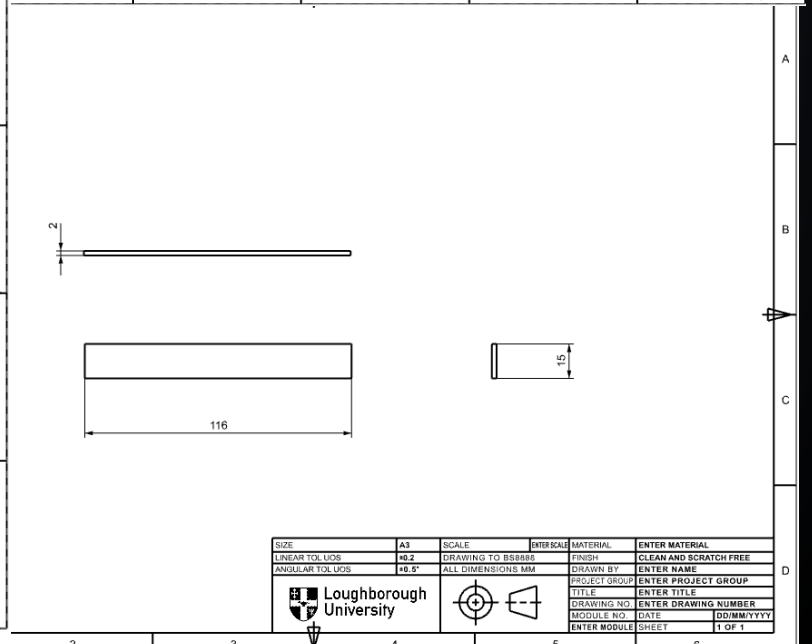
2
15
116
SIZE A3
SCALE ENTER SCALE
MATERIAL ENTER MATERIAL
LINEAR TOL UOS ±0.2
DRAWING TO BS8888
FINISH CLEAN AND SCRATCH FREE
ANGULAR TOL UOS ±0.5°
ALL DIMENSIONS MM
DRAWN BY ENTER NAME
PROJECT GROUP ENTER PROJECT GROUP
TITLE ENTER TITLE
DRAWING NO. ENTER DRAWING NUMBER
MODULE NO. DATE DD/MM/YYYY
ENTER MODULE SHEET 1 OF 1
Loughborough University

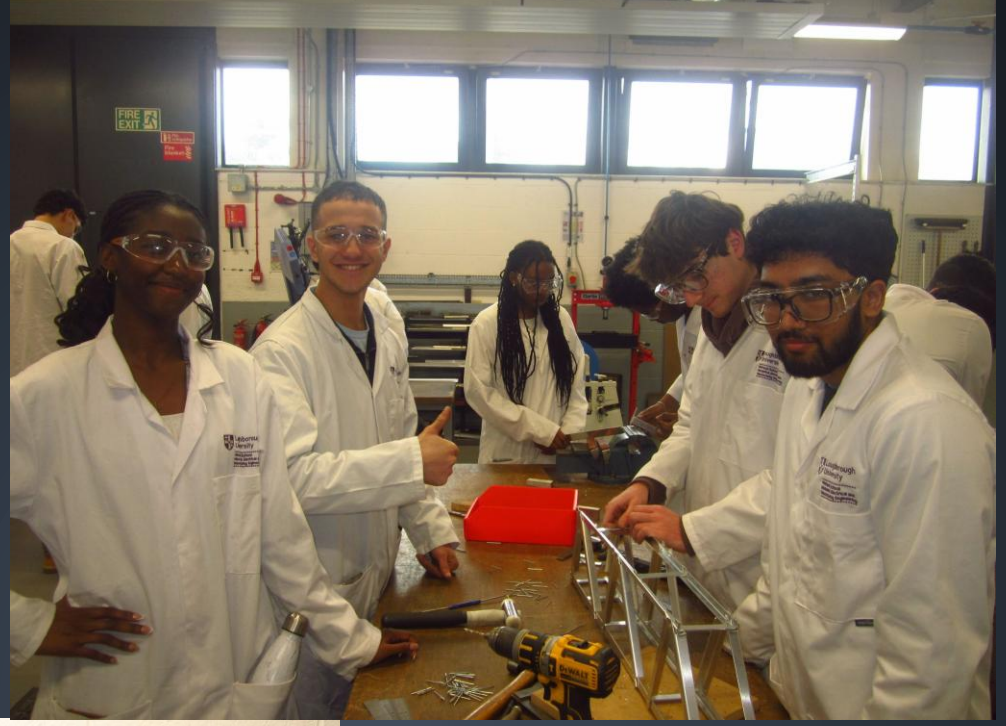
FIRE EXIT

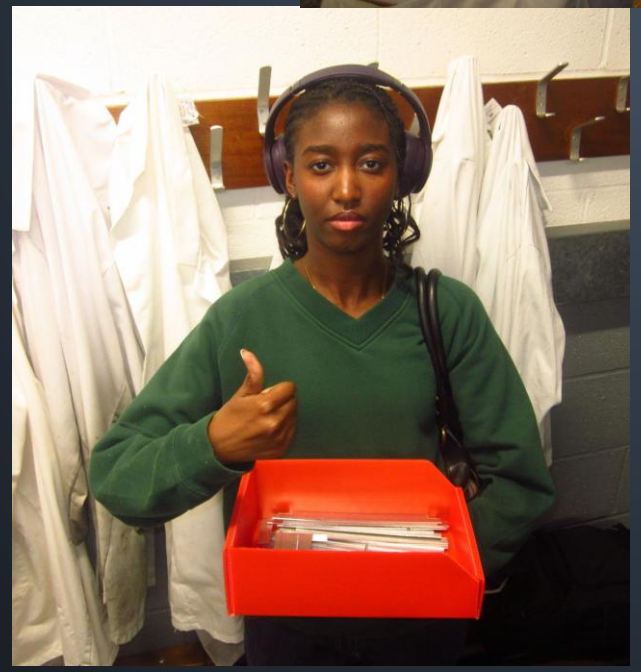

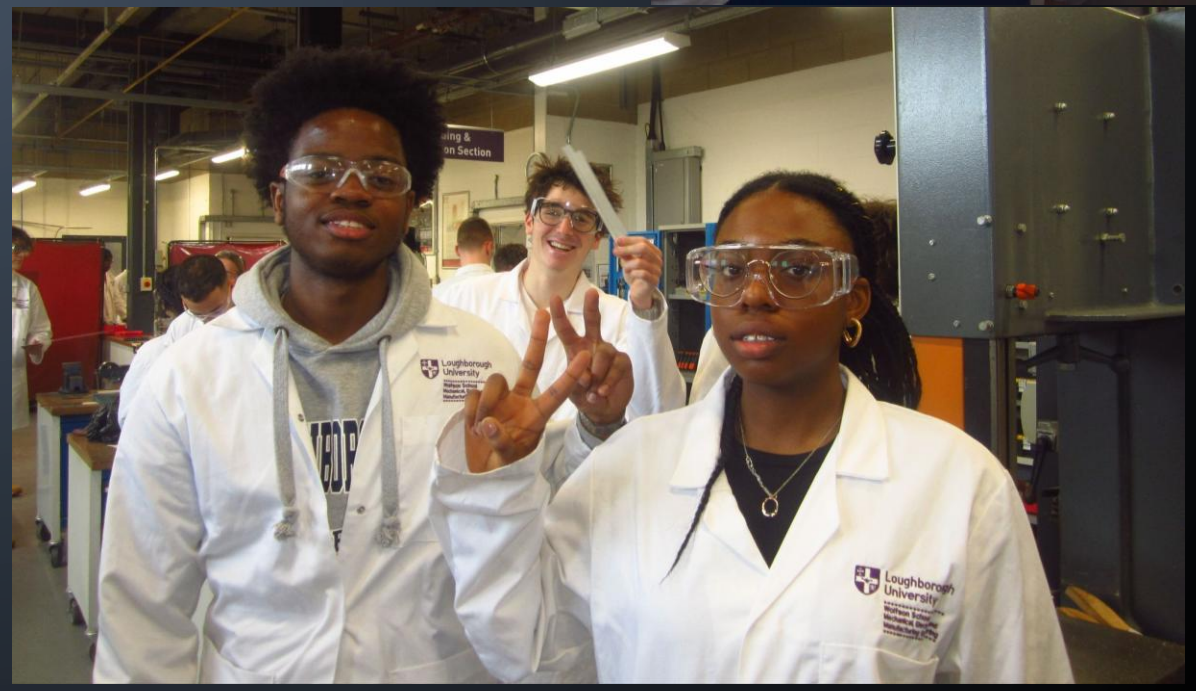

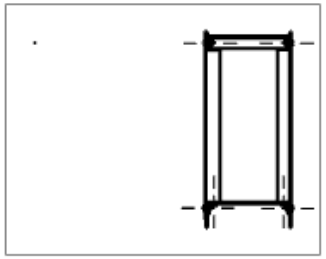

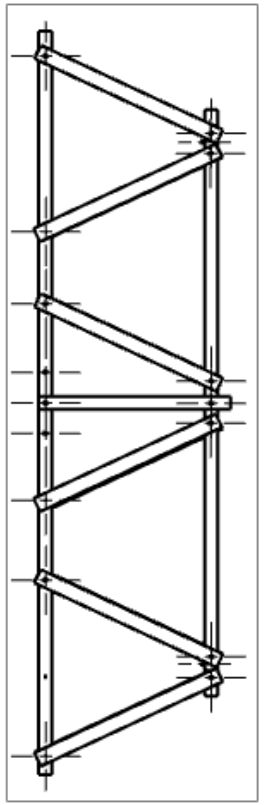

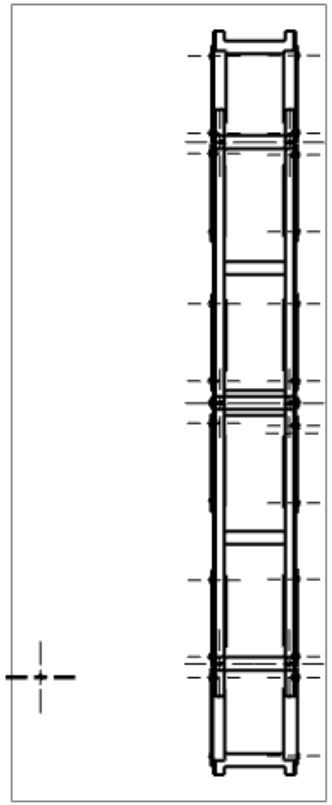

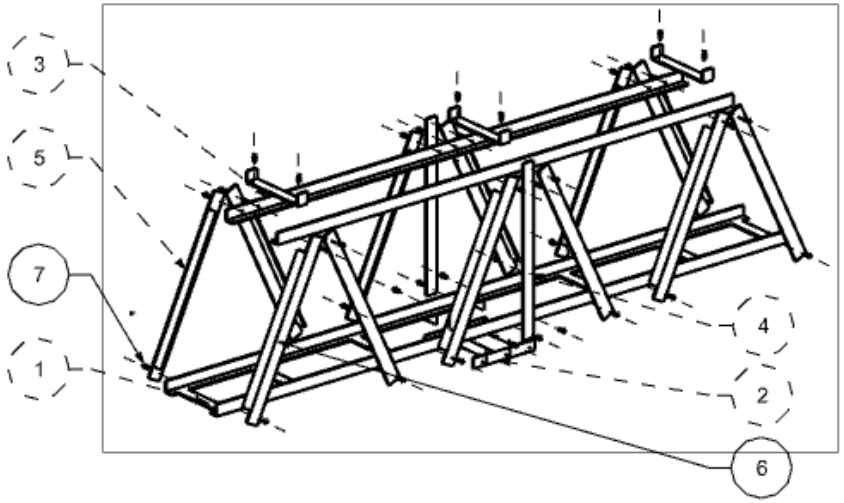

PC NO	PART NAME	MATERIAL	QTY
7	Rivets (3.2mm*8mm)		38
6	Slanted (Left) Truss	Aluminium	6
5	Slanted (Right) Truss	Aluminium	3
4	Straight truss	Aluminium	2
3	Upper Trim	Aluminium	2
2	Weight holder	Aluminium	1
1	Base	Aluminium	1

ALL DIMENSIONS IN MM

SIEMENS

THIS DRAWING HAS BEEN PRODUCED USING AN EXAMPLE TEMPLATE PROVIDED BY SIEMENS PLM SOFTWARE

FIRST ISSUED		TITLE	
DRAWN BY			
CHECKED BY			
APPROVED BY		SIZE A3	DRG NO. Final_Assembly	SHEET REV A
		SCALE 1:1		SHEET 1 OF 1

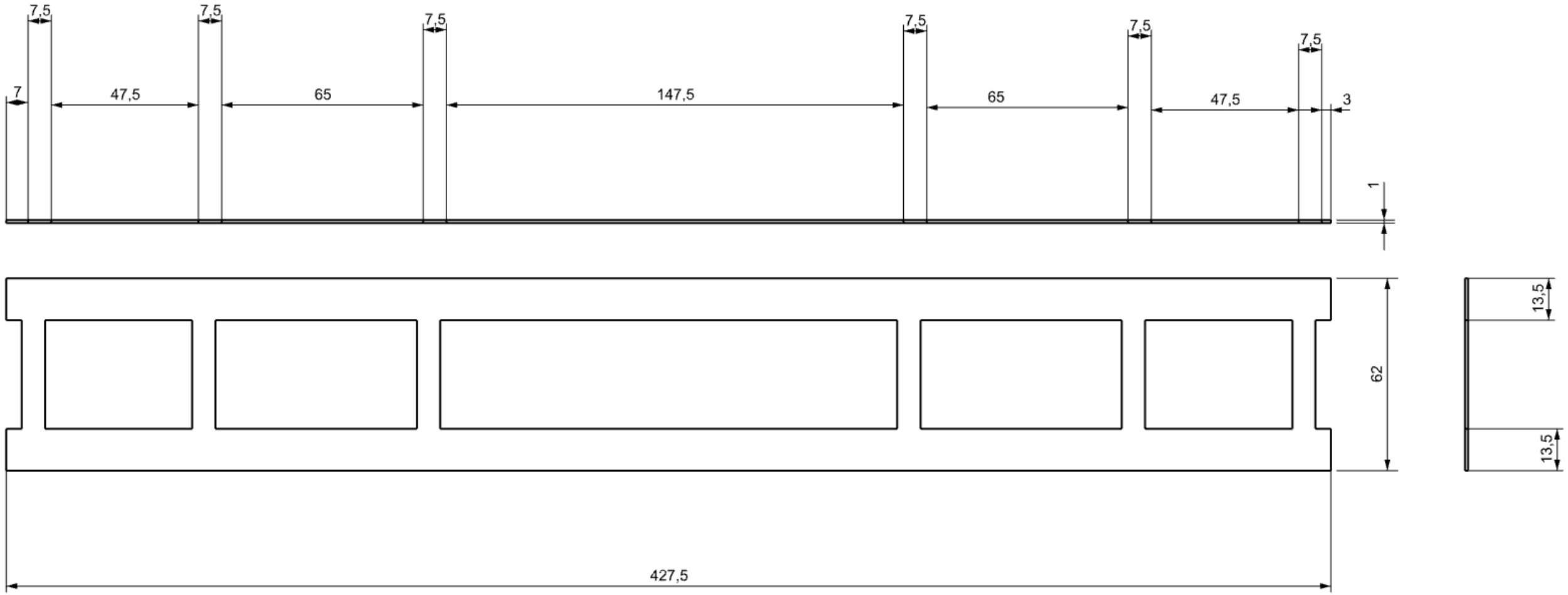
7,5
7,5
7,5
7,5
7,5
7,5
7
47,5
65
147,5
65
47,5
3
1
62
13,5
13,5
427,5

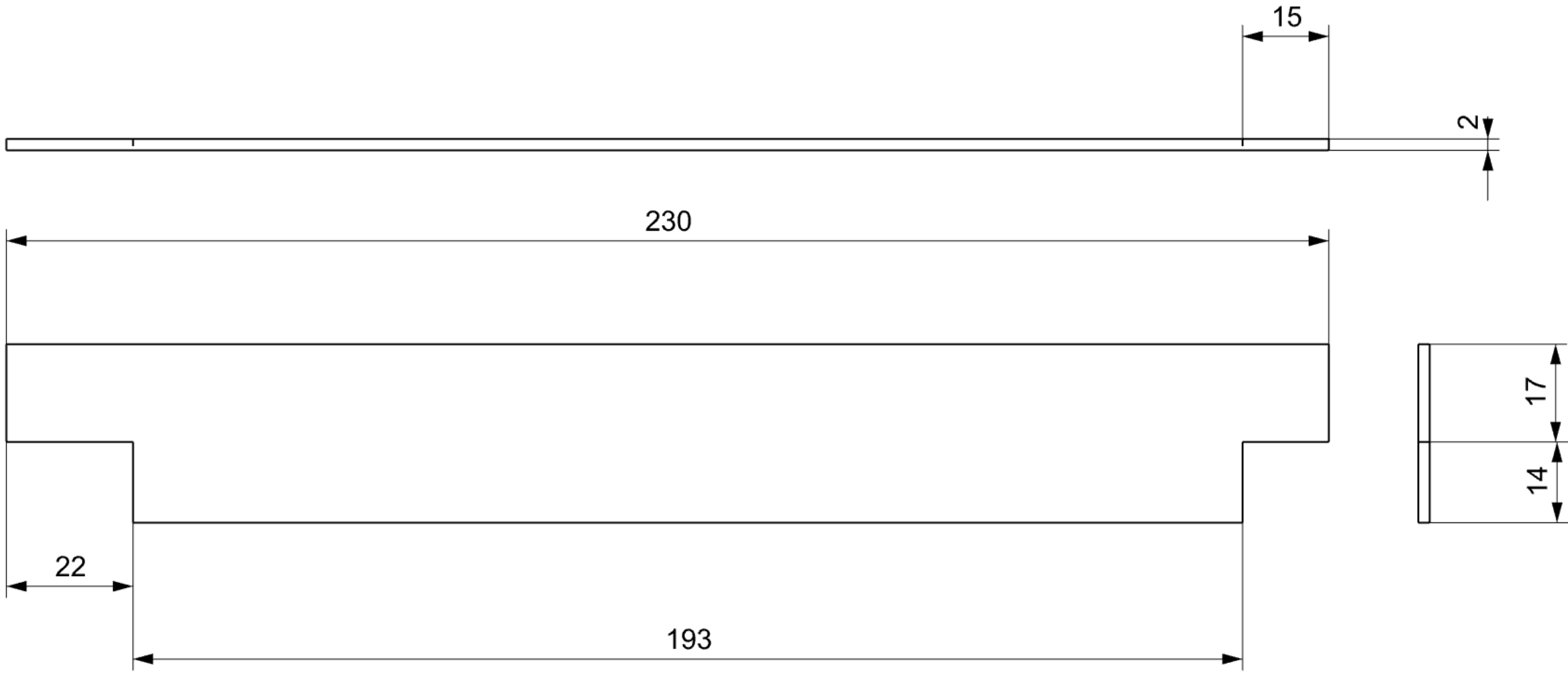
15
2
230
17
14
22
193

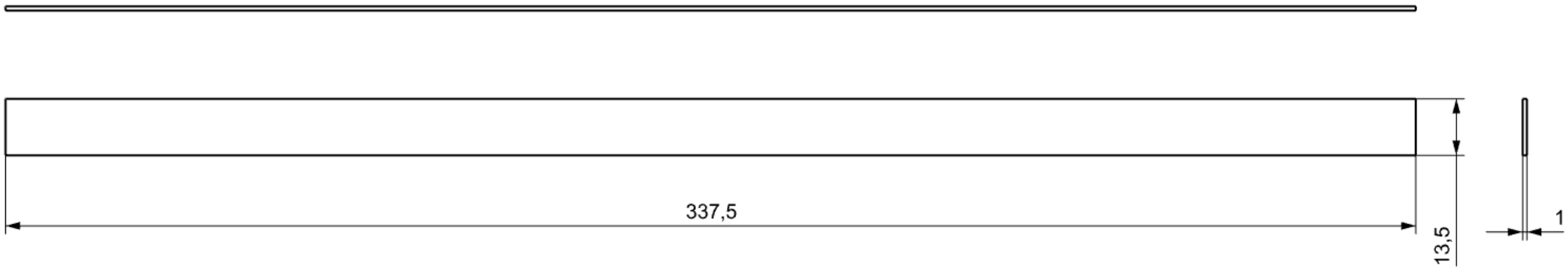
337,5
13,5
1

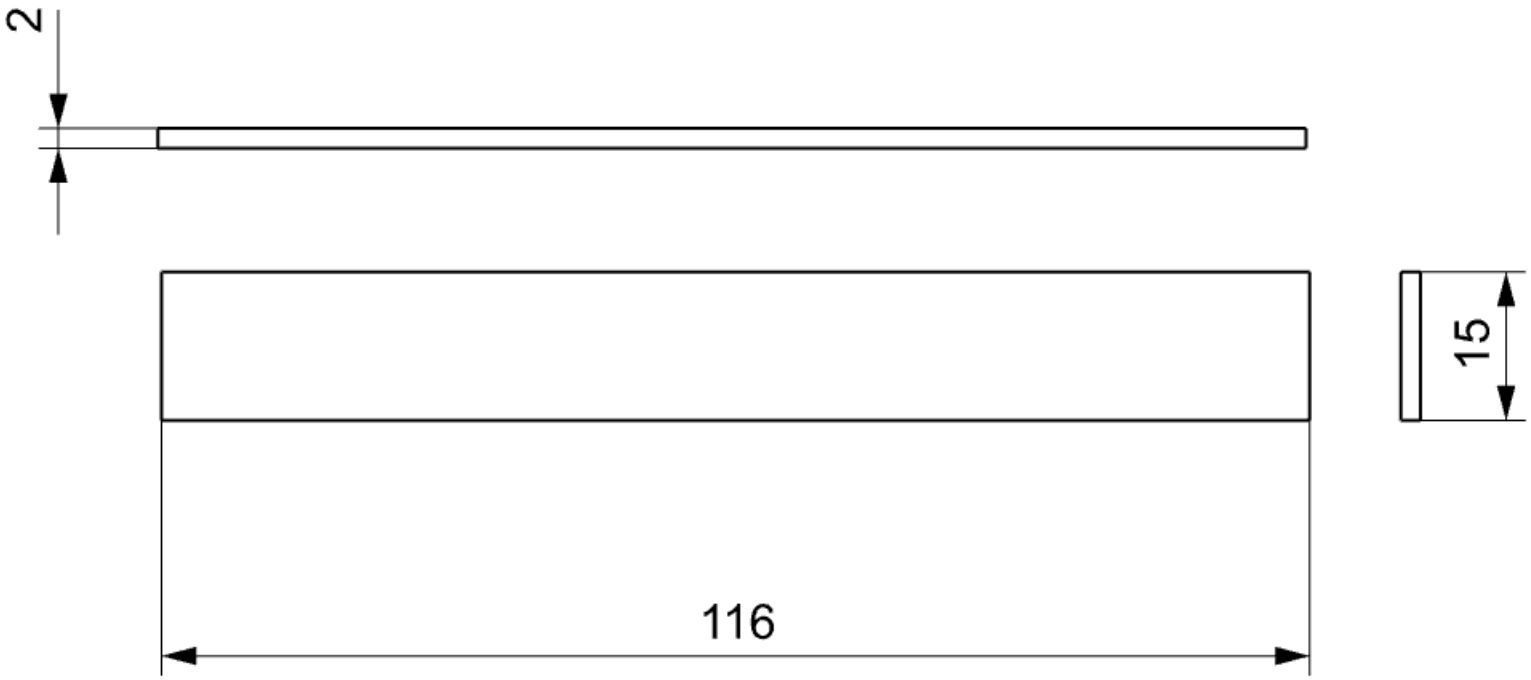
2
15
116

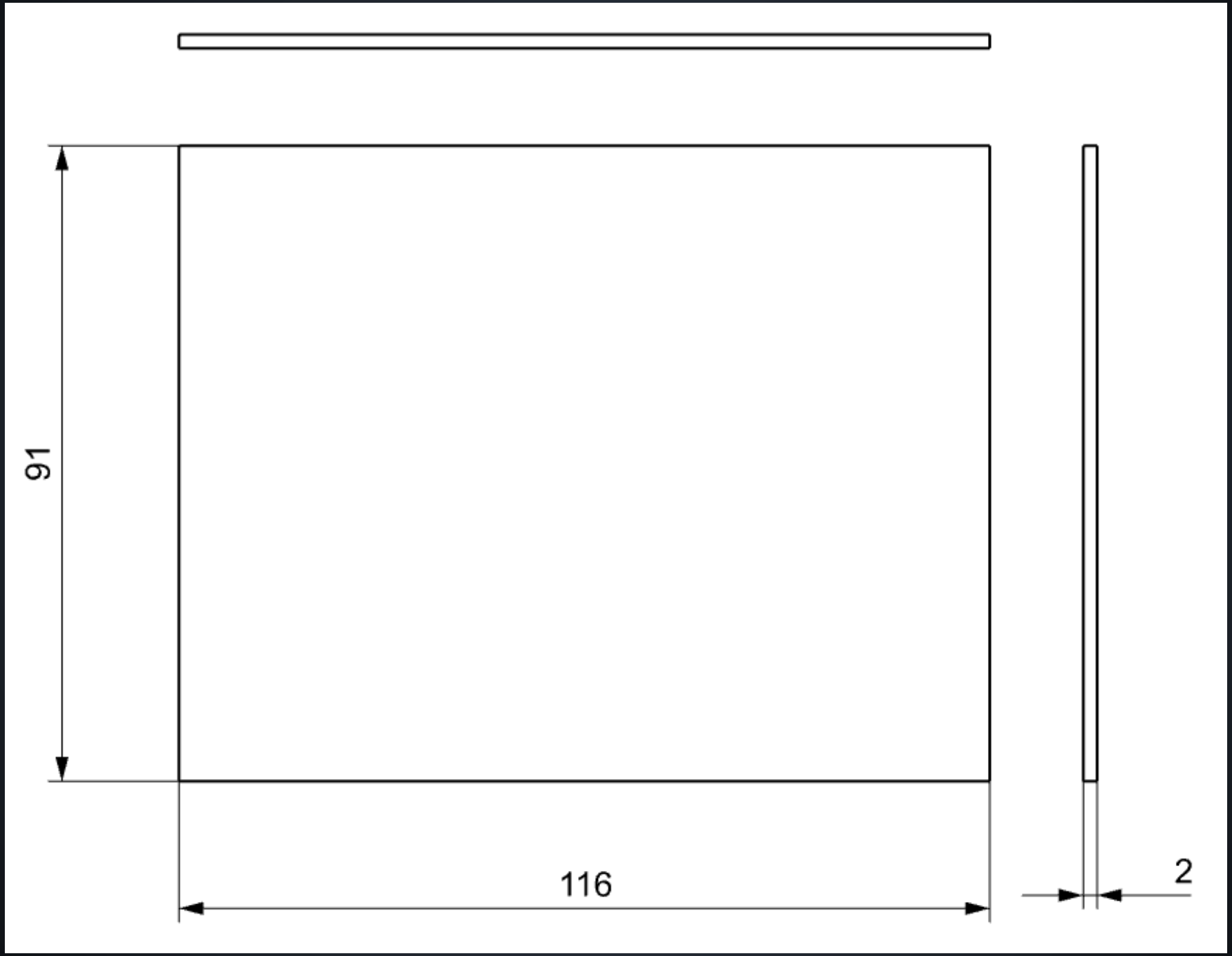
91
116
2

Part 4 V2.prt

top railsV2.prt

base (waterjet) V2.prt

connector V2.prt

truss V2.prt